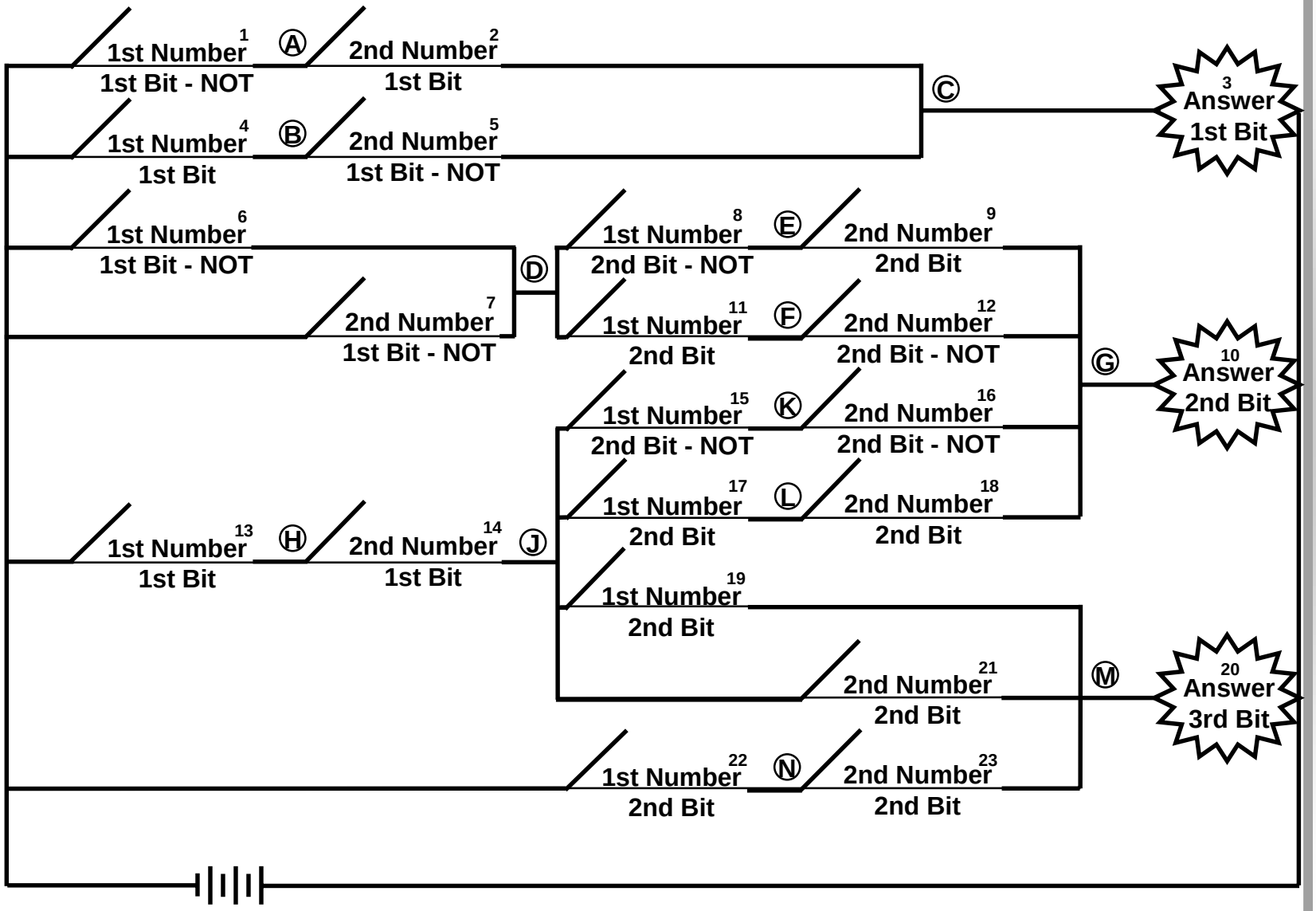
1st Number 1
1st Bit - NOT
Ⓐ
2nd Number 2
1st Bit
1st Number 4
1st Bit
Ⓑ
2nd Number 5
1st Bit - NOT
Ⓒ
3 Answer 1st Bit
1st Number 6
1st Bit - NOT
2nd Number 7
1st Bit - NOT
Ⓓ
1st Number 8
2nd Bit - NOT
Ⓔ
2nd Number 9
2nd Bit
1st Number 11
2nd Bit
Ⓕ
2nd Number 12
2nd Bit - NOT
Ⓖ
10 Answer 2nd Bit
1st Number 15
2nd Bit - NOT
Ⓚ
2nd Number 16
2nd Bit - NOT
1st Number 17
2nd Bit
Ⓛ
2nd Number 18
2nd Bit
1st Number 13
1st Bit
Ⓗ
2nd Number 14
1st Bit
Ⓙ
1st Number 19
2nd Bit
2nd Number 21
2nd Bit
Ⓜ
20 Answer 3rd Bit
1st Number 22
2nd Bit
Ⓝ
2nd Number 23
2nd Bit